The Essential Woodworker

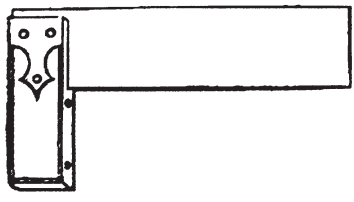

Robert Wearing

Editor: Christopher Schwarz
Distribution: John Hoffman, Sharon Hoffman
Copy editor: Megan Fitzpatrick
ISBN: 978-0-578-06044-6

Original edition published 1988

The Essential Woodworker. Copyright © 2010 by Robert Wearing. Printed and bound in the United States. All rights reserved. No part of this book may be reproduced in any form or by any electronic or mechanical means including information storage and retrieval systems without permission in writing from the publisher; except by a reviewer, who may quote brief passages in a review. Published by:

Lost Art Press LLC
26 Greenbriar Ave.
Fort Mitchell, KY 41017
LostArtPress.com

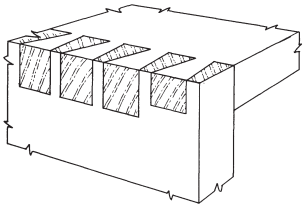

The Essential Woodworker

Skills, Tools And Methods

REVISED EDITION WITH MORE THAN 500 ILLUSTRATIONS

by Robert Wearing

Contents

Introduction – 6

1 Basic Woodworking Skills – 10

Planing 11
Sharpening 12
Adjusting the plane 17
How to plane 20
Two planing exercises 29
Facing 31
Edging 33
Gauging 37
Producing to size 39
Squaring 42
Sawing 45
Screwing 48
Boring 51

2 Make a Table or Stool – 54

Construction and design 55
Marking out the joints 59
Chopping mortices 65
Sawing tenons 68
Button mortices 76
Planing tapers 77
Polishing insides 78
Glueing up 79
Cleaning up the outside 87
The cabinet scraper 89
Jointing the top 94
Dowelling the edge joints 99
Cleaning up the top 101
The scraper plane 103
Shaping the table top 107
Edge shaping 111
The scratch tool 112
Shrinkage buttons 113
Finishes 117
Levelling the feet 122

3 Make a Carcase – 124

Construction and design 125
A dowelled carcase 126
A dovetailed carcase 130
Mark and cut dovetails 136
Mark and cut lap dovetails 143
Shelves 148
Cabinet backs 153
The carcase glue-up 166
Door types 171
The framed door 179
Grooved construction 179
Rebated construction 185
Fitting a door 190
Hingeing a door 194
Fitting ball catches 198
Fitting locks 200
Cabinet bases 203

4 Drawers, Handles and Boxes – 210

Drawer making 211
Drawer framing 222
Handles 224
Box constructions 228
Box hingeing 234
Glass and mirrors 238

Appendices – 241

A Sawing boards 241
B The rip tenon saw 242
C Jig to groove mitres 243
D Jig to groove mitres on the table saw 244
E Glue mitred boxes 246
F Jig for keyed mitre joints 247
G Jig for finger joints 249
H Drawer-slip cramps 251
I Diminishing dovetails 252

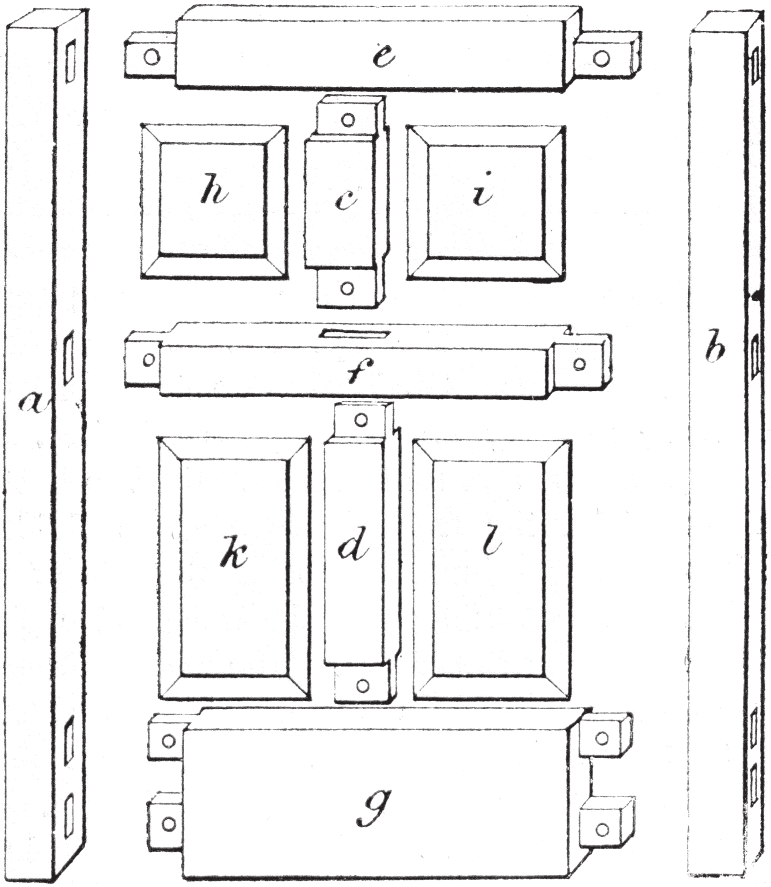

"Every contrivance of man, every tool, every instrument, every utensil, every article designed for use, of each and every kind, evolved from very simple beginnings."

— Robert Collier (1885 - 1950) author, publisher

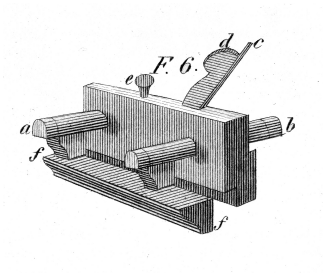

Introduction

I cannot remember not having some of the basic woodworking skills. However, many men, women, boys and girls, of all ages, who are keen to make a start at woodworking, find that a multitude of excellent books on the craft assume very basic knowledge which they do not have.

This is really a pre-textbook. It is aimed mainly at those working alone. The apprentice has the guidance of a master craftsman, while the college student has tutors. Keen amateurs, often working in total isolation, lack this advantage. It is hoped that this book will start them off soundly, so that they will soon be able to take full advantage of good technical books; and if not designing original work, beginners will be competent to work from books of designs, drawings and magazine articles.

Unfortunately, as is the case with other crafts, the initial skills needed are the most difficult to acquire. Planing a flat surface, for a beginner, is much more difficult than cutting a secret mitre dovetail for a more experienced worker.

Accurate joints cannot be marked out and later cut using components which are in twist, unsquare and of uneven thickness. Accurate planing is the foundation upon which successful constructions are built. It is not sufficient to watch a craftsman planing and then to attempt to copy him. He is not just standing beside a plane and moving it back and forth. It is necessary to realize that he is doing much more

than that. If the craftsman is not there to ask, the beginner needs to be given a description of what he is doing and what it feels like. Unlike metal, wood is not uniform. Every piece is different, and herein lies much of the attraction and the charm of working with wood. Each piece requires individual attention and the worker is rewarded by the endless variation of grain pattern and ultimate finish.

Observing many student disasters over the years I have come to realize that lack of skill is the cause of remarkably few of them. This is because, time not being money, amateurs can proceed so slowly and by such small steps that success is almost guaranteed. They can, for instance, examine the wood after almost every shaving. In this way it is virtually impossible to plane undersize. The main causes of failure seem to be careless and faulty marking out (often even just not bothering to shade in or indicate the waste), or else blunt tools: that extra turn of the plane's adjusting screw, that results in tearing by the blunt cutter; the extra force needed for a blunt chisel with the resulting reduction of control, or the slow wandering progress of a blunt saw. Hence before any activity can begin the tools must be properly prepared and sharpened. Not holding the workpiece securely is another cause of failure.

It was difficult to decide which constructions to include as 'basic.' Finally, I selected those traditional and proven joints and constructions for the four basic cabinet-making forms. These are the stool or table construction, the carcase or box construction, the door and the drawer. Almost all furniture is made up from these units in varying combinations.

A number of small power tools are now available to the amateur. These have made possible several quite acceptable alternatives to traditional jointing, and this book takes account of them.

During the last few years in British schools we have seen the abandonment of the '0' and 'A' level examinations in Woodwork and their replacement by the 'progressive' Craft, Design and Technology. In the post-war years fine cabinet making was produced in many schools by well-trained and gifted teachers, particularly so in the grammar schools which produced future teachers. Alas, pupils now emerging from the schools who opt for further education in woodworking crafts are sadly deficient in basic skills. It is hoped that this book satisfies the real needs of such people.

In spite of the non-sexist trends in the schools it is a fact that girls emerge even more deficient in woodworking skills than boys. Several

outstanding women cabinet makers have shown that they can more than hold their own with men. I hope this book will fill that gap and increase the confidence of girls and women.

Chapter 4 on drawer construction was written many years ago by my former tutor Cecil Gough who has generously permitted me to use it. Over the years I have found that it cannot be improved on. Some of the material has previously appeared in abridged form in *Woodworker* magazine. The book's original editor has kindly agreed to its inclusion.

I am much indebted to the hundreds of pupils and students with whom I have worked over many years, who have brought to my attention, often unwittingly, the problems of the beginner. I hope I have solved a good proportion of them. While I am sure that many readers will enjoy the book in an armchair by the fire, its real place is propped up on the bench like a music score, and if it eventually falls to pieces there it will have achieved its purpose.

Metric conversions are approximate, in round numbers, although where it is vital the conversions are accurate.

— *Robert Wearing*

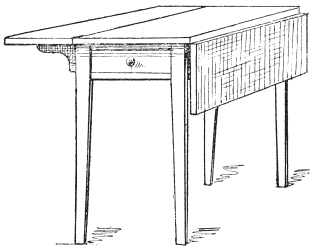

Chapter 2

Make a Table or Stool

Construction and design

Design brief: Before commencing on any design other than a copy a design brief must be prepared. A design brief is a collection of all the data relevant to the construction and use of the article and the design is based on this information. The brief can best be produced by writing down as many questions as possible about the job, and then by experiment, research, measurement or judgment, find the answers to these questions. For example, questions about a coffee table might include the following:

Where will it be used?
Who will use it?
How many people will use it?
What will it carry?
How will people sit at it?
What will be its top shape?
How high will it be?
What will be its basic constructional form?
What will be the finish?
What wood is preferred or is available?
Will the top have any special finish?
Will a shelf or rack be required?

Design sketch

The answers to these practical questions will give the worker the length, the width and the height required. From these three figures a number of design sketches may be produced and the best one selected (Fig 90, for example).

Working drawing

From the design sketch it will now be possible to build up a working drawing. For items of coffee-table size a full-sized drawing is an advantage; larger items must of course be drawn to scale. These full-sized drawings can be drawn on decorator's 'lining' (ceiling) paper. Before making a start the following table of 'finished sizes' should be consulted (Fig 91).

Fig 91.

sawn sizes		planed sizes	
mm	in.	mm	in.
100	4	96	3-7/8
75	3	71	2-7/8
63	2-1/2	59	2-3/8
50	2	46	1-7/8
38	1-1/2	34	1-3/8
32	1-1/4	28	1-1/8
25	1	21	7/8
19	3/4	15	5/8
15	5/8	11	1/2
12	1/2	8	3/8

The sawn sizes are those used by the timber yards when sawing logs into boards. The finished sizes are those to which the sawn boards can be planed, either by hand or by machine. This figure is both the maximum which can be obtained from the sawn board and also the size marketed as a planed board. In planning component sizes these sizes should be kept in mind in order to use wood with the greatest economy. A reduction of thickness of 1mm (1/16in.) may afford a considerable cost saving.

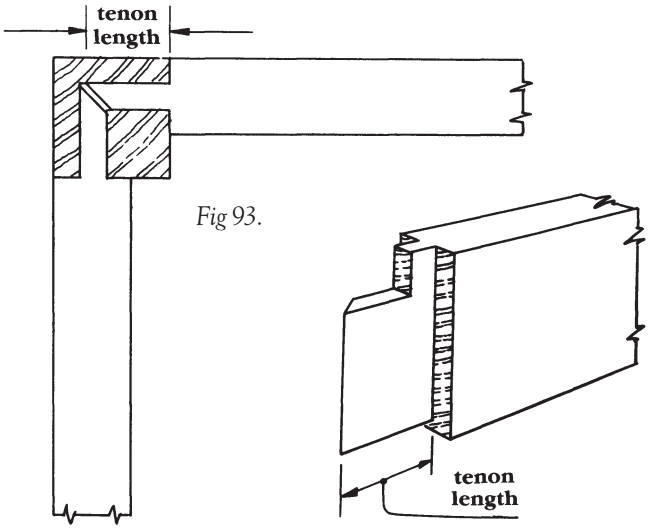

Fig 93.

CUTTING LIST							*All finished sizes in inches*
NAME a. READER			JOB	COFFEE TABLE			
	PIECE	No.	L	W	Th.		REMARKS
A	Top	1	36	18	$\frac{5}{8}$	✓	Oak/Jointed
B	Legs	4	18	$1\frac{3}{8}$	$1\frac{3}{8}$	✓	Oak
C	Long rails	2	$27\frac{3}{8}$	$2\frac{3}{4}$	$\frac{7}{8}$	✓	″
D	Short rails	2	$13\frac{3}{8}$	$2\frac{3}{4}$	$\frac{7}{8}$	✓	″
E	Shrinkage buttons	16	EX	$\frac{7}{8}$	$\frac{5}{8}$		″

Fig 94

The working drawing (side view) (Fig 92) is built up as follows. Draw the ground line (A) then draw the top of the table (B). Consult the finished sizes and draw in the top thickness (C). Mark this off to length (D). Consider the overhang and draw in the outside edge of the legs (E). Consult the finished sizes again and draw in the leg thickness (F). The top rail (G) is drawn in next, wide enough to give a good joint but not wastefully wide. This can be made narrower if the extra support of a stretcher rail is given. The end (width) view can be similarly drawn. To save space this can be superimposed on the front view (shaded area).

When a proper mortice and tenon construction is to be used (as in

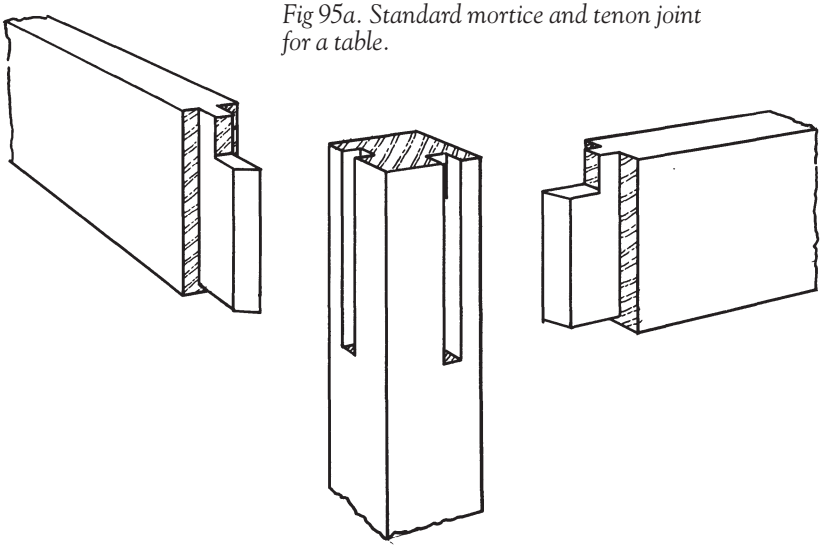

Fig 95a. Standard mortice and tenon joint for a table.

this example) the length of the tenon must now be ascertained. This is easily done (Fig 93) by making a full-sized drawing on graph paper. Finally the inside edges of the legs can be tapered below the joint. This design retains the simplicity of an all-right-angle construction.

To obviate frequent reference to a drawing in the early stages it is convenient to produce a cutting list (Fig 94) and to work solely from this in the early stages.

Finished (i.e. final) sizes are used in the list, which avoids allowances being added at several stages in the work. Unfortunately, although there are only three dimensions there are many more names for them, e.g. length, height, width, depth, broad, thick, and so on. The three to be used are length (the distance along the grain), thickness (the smallest dimension) and width (the intermediate size). Width and thickness are often the same size.

To avoid confusion components are often lettered, as in the first column. The remaining columns are self-explanatory except for the blank one. A tick here signifies that the component has been sawn out. A cross tells that the piece has been produced to size and is ready for marking out.

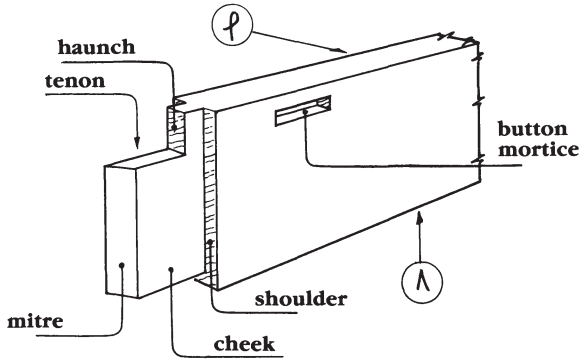

Fig 95a and 95b. Mortice and tenon joint. In a basic stool or table, two rails are joined into the top of each leg by means of a mortice and tenon joint. Either the legs or rails may be marked out first. In this construction, the rails are marked out.

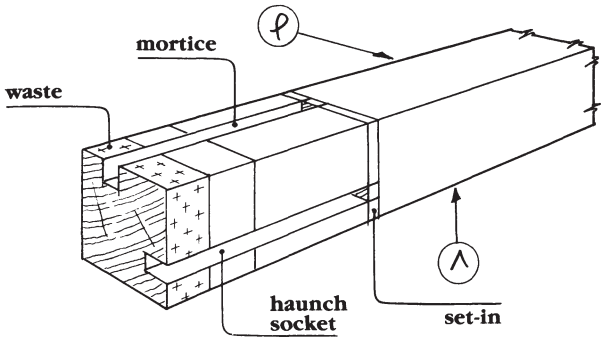

Marking out the joints

In a table or stool construction either the legs or the rails may be marked out first. This example starts with the rails. Cramp together the long and short pairs, with true faces out and true edges down. Mark each end with a knife and square (Fig 96). Then uncramp the pairs, square round the lines (Fig 97), and carefully saw off the waste. It is important to saw this cleanly in order to be able to gauge nicely on the end later. First gauge the set-in, at about 3mm (1/8in.), and then the haunch (Fig 98). The set-in is purely cosmetic, to conceal any irregularity in the joint. The

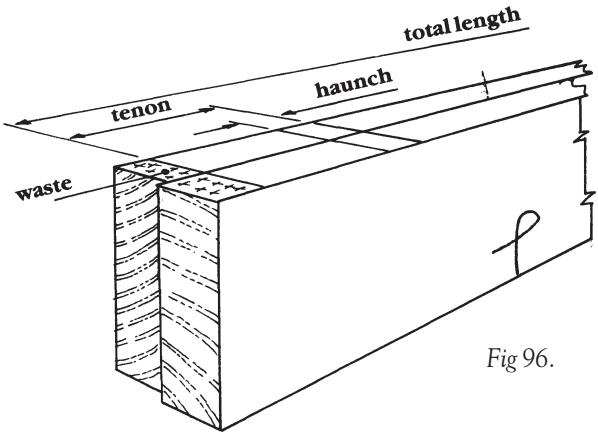

Fig 96.

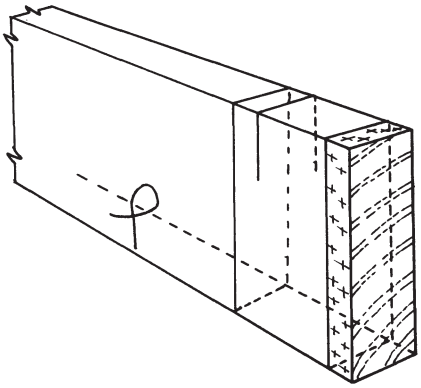

Fig 97.

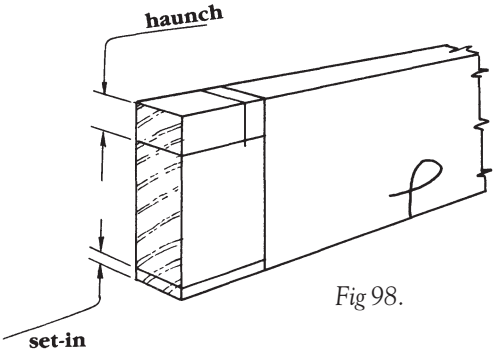

Fig 98.

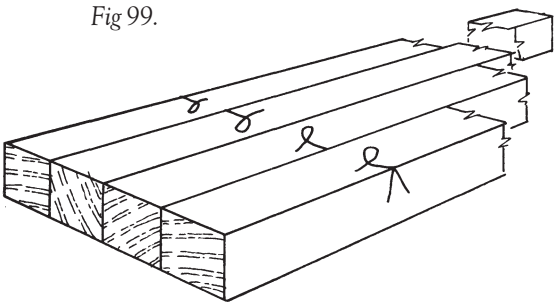

Fig 99.

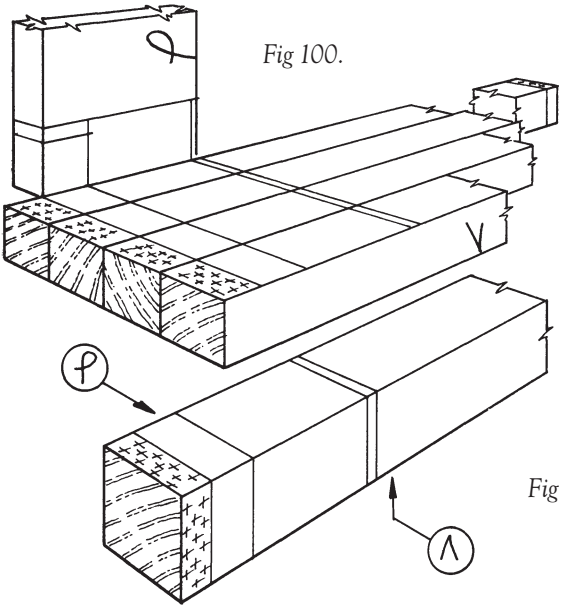

Fig 100.

Fig 101.

haunch provides a bridge at the top of the leg, helping to prevent the mortice splitting and at the same time, by its added width to the tenon, reducing the possibility of the rail twisting in the leg. The haunch should be about a quarter of the tenon width. Some writers will say a third but this seems to reduce the tenon too much.

To mark out the legs, put them together with the faces and edges as shown (Fig 99) then turn them over and mark them on a blank face. Mark the total length, leaving some waste (which should be shaded) at each end. The waste must be about 20mm (3/4in.) at the top or jointed

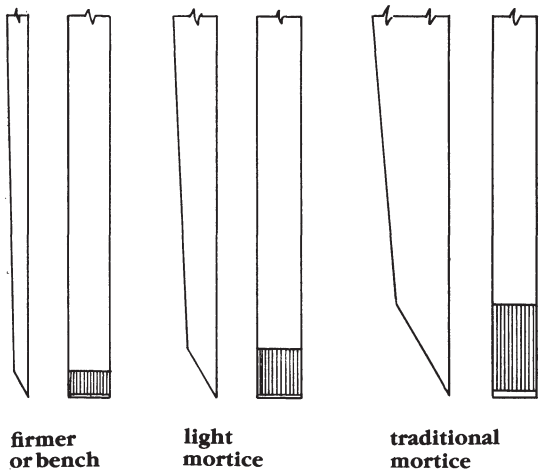

Fig 102

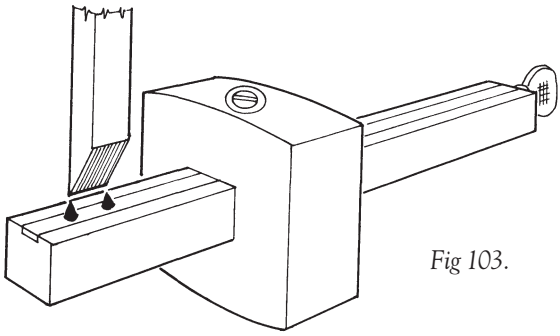

Fig 103.

end. Offer up the rail, and from it mark the haunch, set-in and rail width (Fig 100), square these across and uncramp. Square these lines onto the other blank face. The total length lines are squared right round (Fig 101).

The thickness of a tenon is normally about one third of the rail thickness. It is not taken from measurement but is the size of the nearest available chisel to this size. The traditional hand mortice chisels vary considerably from the nominal size. Machine chisels are quite accurate and are now becoming metric. Hand mortice chisels are much thicker than the common firmer or bench chisel (Fig 102), which is very liable to break when levering. The extra thickness of the mortice chisel is also a help in preventing it from twisting.

Set the mortice gauge carefully to the chisel (Fig 103) then set to its

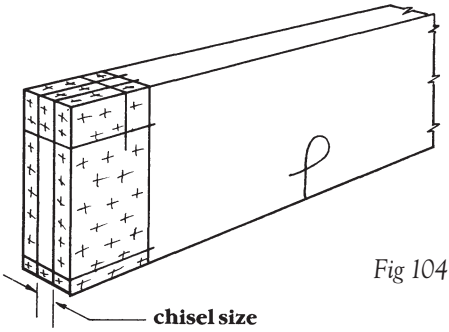

Fig 104.

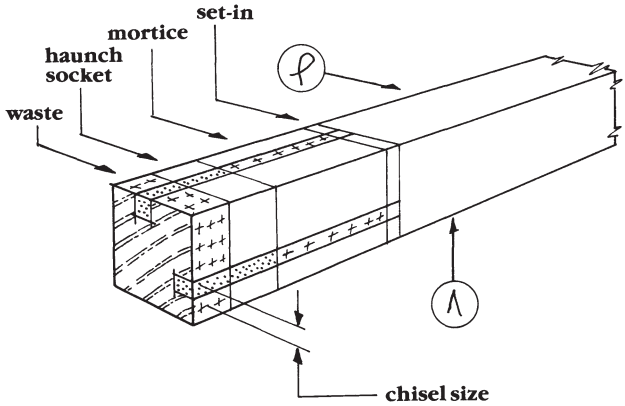

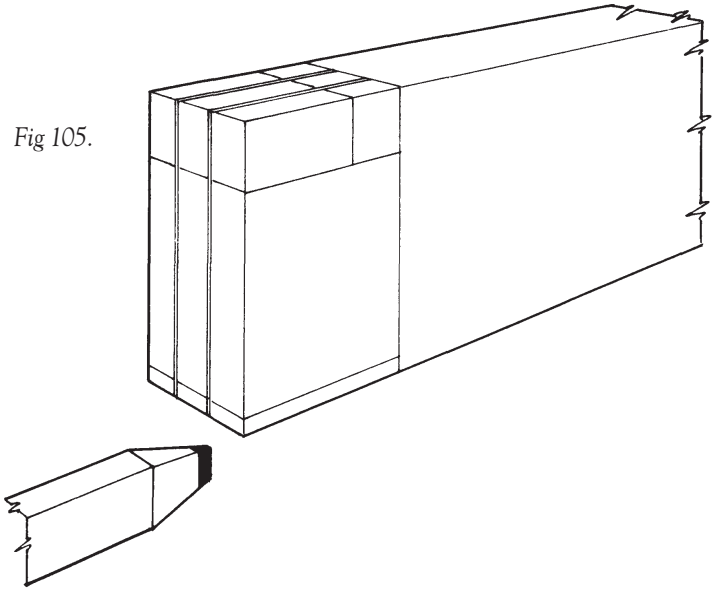

Fig 105.

Fig 106a.

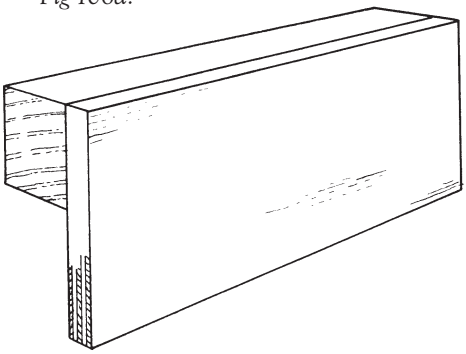

Fig 106b.

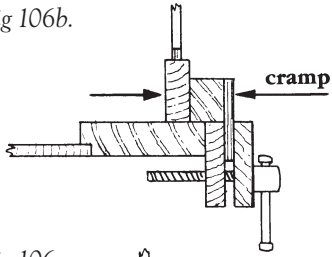

Fig 106c.

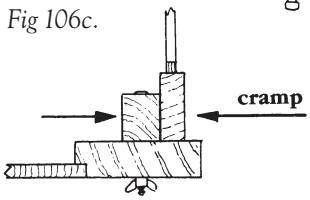

Fig 107a.

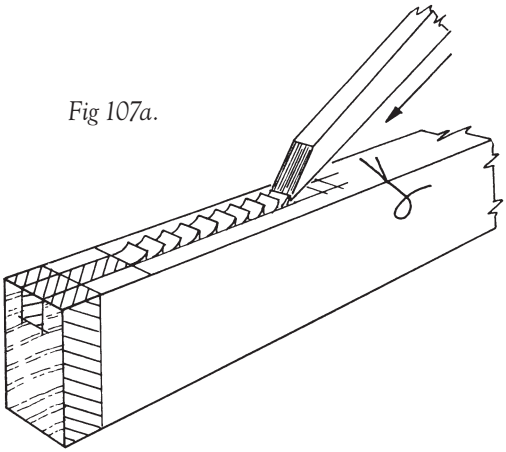

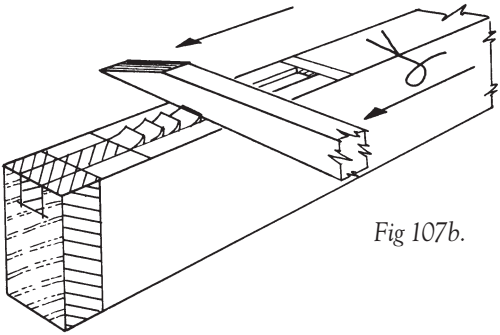

Fig 107b.

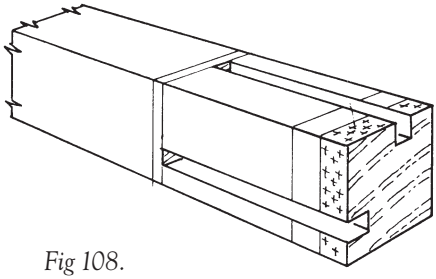

Fig 108.

Fig 109.

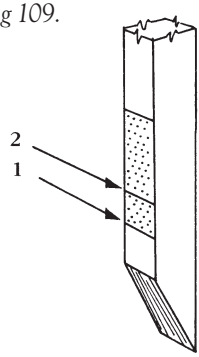

position on the rail, commonly central. Without changing the setting, mark out the mortices on the legs (Fig 104), gauging from the true face and the true edge. Mark the tenons similarly, gauging from the true face.

Beginners will find it helpful later on, when sawing the tenons, if a thick, soft pencil is run in the gauge marks. This produces a double pencil mark (Fig 105). The waste should be very clearly marked with pencil, generally by diagonal shading. (The method adopted in the illustrations is to avoid confusion with the end grain, and is not typical.)

Note: It is a good idea to number the joints to avoid confusion. This should be done on parts not involved in the cleaning-up process.

Chopping mortices

The mortices should be cut before sawing the tenons, as the latter are more liable to suffer accidental damage before assembly. It is not good practice to grip the work in the vice because then it cannot be tested for verticality, and if it is driven down in the vice during the process, it can become scored. Instead, cramp the work to a morticing block (Fig 106a) with G-cramps or handscrews. The block can be gripped in the vice (Fig 106b) or bolted to the bench (Fig 106c). This method is particularly useful when the bench has a front apron which prevents cramping. The morticing block is useful when the workpiece is small and thin.

Fig 107a shows how a shallow trench can be cut before beginning the mortice proper. Simply lean on the chisel until there is a crunch, then wipe the chisel across (Fig 107b) removing the small chips. The chisel can now be positioned without effort. Before starting to chop, put a depth mark on the chisel (a piece of masking tape will do). If two

Photo 13 Chopping the mortice. The true mortice chisel is shown and the workpiece is cramped to a morticing block which is held in a bench vice

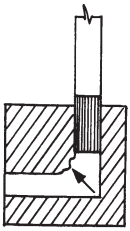

Fig 110.

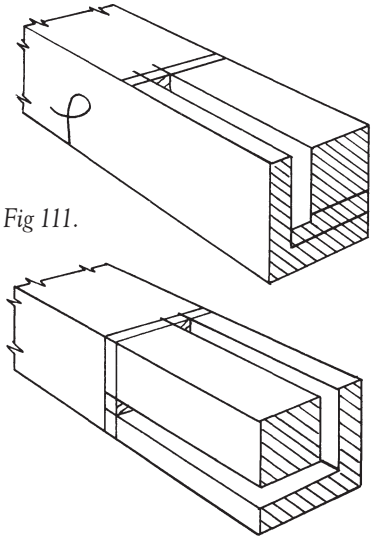

Fig 111.

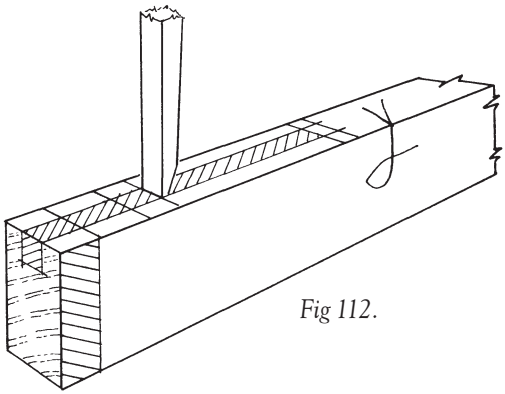

Fig 112.

mortices are to be cut (Fig 108), two depth marks are required (Fig 109). Do not cut the first mortice to full depth or the second will be chopped over a hole and the inside corner may break away (Fig 110). The first mortice should be chopped to a reduced depth (Fig 111) then the second to full depth, thus avoiding this risk.

Having cramped the work securely to the block, drive in the chisel near one end of the mortice, bevel towards the centre (Fig 112). Check that it is vertical by placing a small straightedge against the true face (Fig 113); a longer rule will foul the handle. Withdraw the chisel, turn it round and drive in again with the bevel towards the hole. Push forward

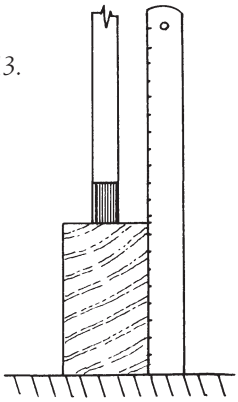

Fig 113.

to break off the chip, then lever it out. Continue the sequence of drive in (Fig 114), break off the chip (Fig 115) then lever out (Fig 116). Continue almost to the end of the mortice, leaving a small piece of waste on which to lever. Frequently check that the chisel is vertical. Reverse the chisel and proceed to the other end. Continue the method, backwards and forwards until full depth has been reached (Fig 117). Finally chop down the ends at the knife marks, break off and remove the chip without bruising the ends.

Accuracy of depth can be tested by using an adjustable depth gauge or an improvized wooden one (Fig 118). If there is a haunch socket, this is chopped in the same way, right to the end of the component as in Fig 108. The mortice cannot be narrower than the width of the chisel, so it follows that any whittling of the sides of the mortice to neaten it will make it oversize. Keep the chisel vertical and do not permit it to twist as this will also result in an oversize mortice. The practice of first drilling a row of holes and then opening them up neither saves time nor produces a more accurate mortice.

Sawing tenons

The accurate sawing of tenons (Fig 119) is a vital skill. They should be sawn with confidence and should fit from the saw. To saw clear of the lines, for safety, is not recommended since whittling an overthick tenon to size is both more difficult and less accurate than sawing correctly in the first place. A 250mm (10in.) tenon or backsaw is the most commonly used for this purpose. Frame saws are used in Europe and by some workers in the USA, but they have never been popular in Britain since the manufacture of good-quality backsaws, and beginners usually find them rather clumsy.

Before starting, check over the names of the parts on Fig 95 and shade in the waste. While there is little chance of throwing away the wrong piece, it is essential that the sawdust should be removed from the